San Bernardo	SEASON: AW 25	SUPPLIER: TBC	QUALITY: 100% MERINO WOOL N/M TBC	STYLE: CHERRY CODED SWEATER
	CLIENT: SAN BERNARDO	DATE: 30/05/25	FAIRISLE JACQUARD GAUGE: 7GG	DESIGN SKETCH

FRONT

BACK

ANY IMAGES, DESIGN & SKETCHES CONTAINED HERE OR ATTACHED TO THIS DOCUMENT ARE COPYRIGHT AND INTELLECTUAL PROPERTY OF SAN BERNARDO. ACTION WILL BE TAKEN AGAINST ANY INFRINGEMENT

© SAN BERNARDO

San Bernardo	SEASON: AW 25	SUPPLIER: TBC	QUALITY: 100% MERINO WOOL N/M TBC	STYLE: CHERRY CODED SWEATER
	CLIENT: SAN BERNARDO	DATE: 30/05/25	FAIRISLE JACQUARD GAUGE: 7GG	MANUFACTURER SPECIFICATIONS

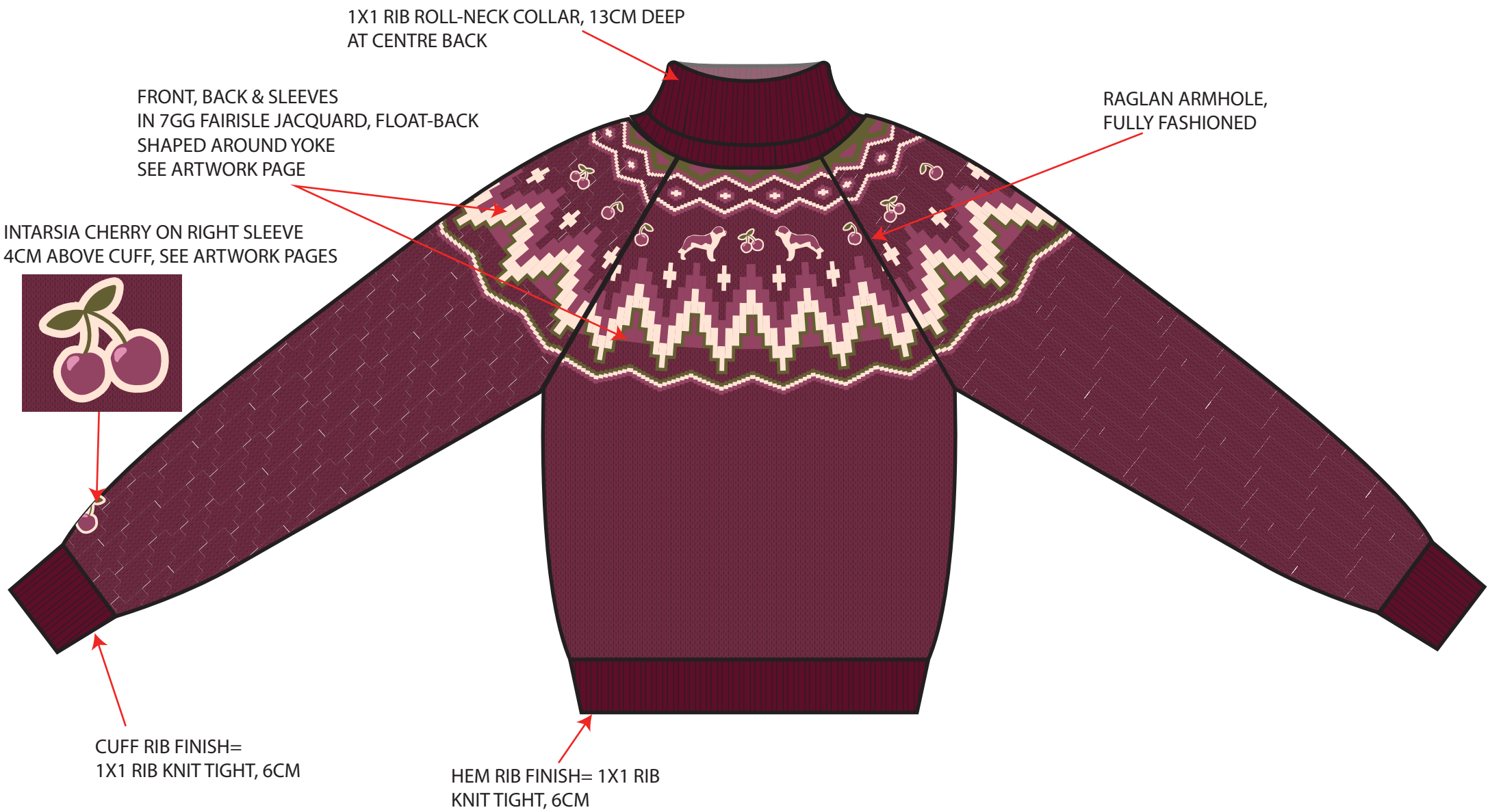

ANY IMAGES, DESIGN & SKETCHES CONTAINED HERE OR ATTACHED TO THIS DOCUMENT ARE COPYRIGHT AND INTELLECTUAL PROPERTY OF SAN BERNARDO. ACTION WILL BE TAKEN AGAINST ANY INFRINGEMENT

© SAN BERNARDO

SEASON: AW 25	SUPPLIER: TBC	QUALITY: 100% MERINO WOOL N/M TBC	STYLE: CHERRY CODED SWEATER
CLIENT: SAN BERNARDO	DATE: 30/05/25	FAIRISLE JACQUARD GAUGE: 7GG	MANUFACTURER SPECIFICATIONS

SATIN STITCH TECHNIQUE EXAMPLE

SATIN STITCH EMBRODERY AT CB, REPLACE 2X CHERRYS AT BACK
IN DTM COLOUR THREAD, 4CM DIAMETER,
SEE FOLLOWING PAGE FOR ARTWORK

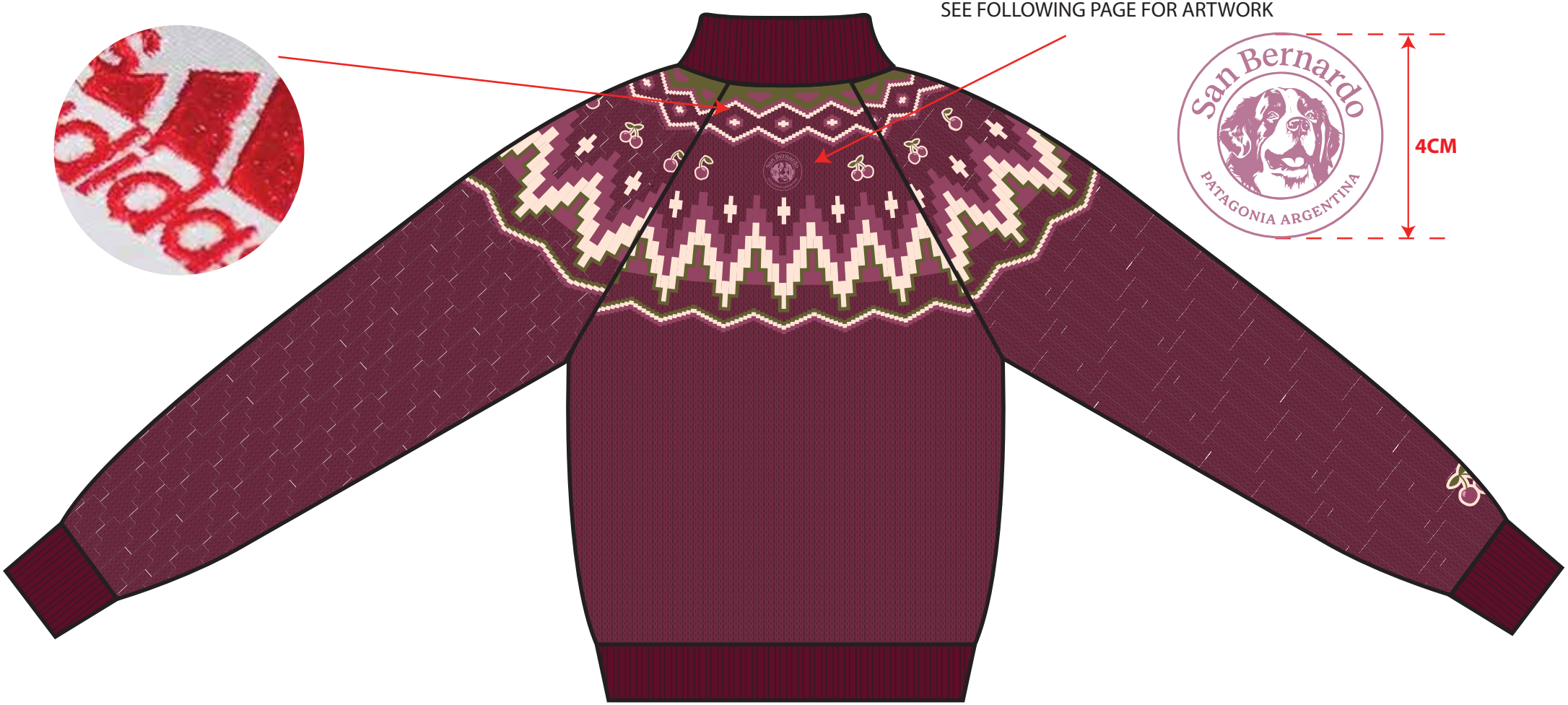

ANY IMAGES, DESIGN & SKETCHES CONTAINED HERE OR ATTACHED TO THIS DOCUMENT ARE COPYRIGHT AND INTELLECTUAL PROPERTY OF SAN BERNARDO. ACTION WILL BE TAKEN AGAINST ANY INFRINGEMENT

© SAN BERNARDO

San Bernardo	SEASON: AW 25	SUPPLIER: TBC	QUALITY: 100% MERINO WOOL N/M TBC FAIRISLE JACQUARD GAUGE: 7GG	STYLE: CHERRY CODED SWEATER
	CLIENT: SAN BERNARDO	DATE: 30/05/25		EMBROIDERY ARTWORK

EMBROIDERY ARTWORK FOR BACK NECK

ANY IMAGES, DESIGN & SKETCHES CONTAINED HERE OR ATTACHED TO THIS DOCUMENT ARE COPYRIGHT AND INTELLECTUAL PROPERTY OF SAN BERNARDO. ACTION WILL BE TAKEN AGAINST ANY INFRINGEMENT

© SAN BERNARDO

San Bernardo	SEASON: AW 25	SUPPLIER: TBC	QUALITY: 100% MERINO WOOL N/M TBC	STYLE: CHERRY CODED SWEATER
	CLIENT: SAN BERNARDO	DATE: 30/05/25	FAIRISLE JACQUARD GAUGE: 7GG	JACQUARD ARTWORK

JACQUARD LAYOUT FRONT

ANY IMAGES, DESIGN & SKETCHES CONTAINED HERE OR ATTACHED TO THIS DOCUMENT ARE COPYRIGHT AND INTELLECTUAL PROPERTY OF SAN BERNARDO. ACTION WILL BE TAKEN AGAINST ANY INFRINGEMENT

© SAN BERNARDO

San Bernardo	SEASON: AW 25	SUPPLIER: TBC	QUALITY: 100% MERINO WOOL N/M TBC	STYLE: CHERRY CODED SWEATER
	CLIENT: SAN BERNARDO	DATE: 30/05/25	FAIRISLE JACQUARD GAUGE: 7GG	JACQUARD ARTWORK

JACQUARD LAYOUT BACK (CENTRE SPACE IS FOR EMBROIDERED LOGO)

ANY IMAGES, DESIGN & SKETCHES CONTAINED HERE OR ATTACHED TO THIS DOCUMENT ARE COPYRIGHT AND INTELLECTUAL PROPERTY OF SAN BERNARDO. ACTION WILL BE TAKEN AGAINST ANY INFRINGEMENT

© SAN BERNARDO

San Bernardo	SEASON: AW 25	SUPPLIER: TBC	QUALITY: 100% MERINO WOOL N/M TBC	STYLE: CHERRY CODED SWEATER
	CLIENT: SAN BERNARDO	DATE: 30/05/25	FAIRISLE JACQUARD GAUGE: 7GG	JACQUARD ARTWORK

JACQUARD LAYOUT SLEEVES

ANY IMAGES, DESIGN & SKETCHES CONTAINED HERE OR ATTACHED TO THIS DOCUMENT ARE COPYRIGHT AND INTELLECTUAL PROPERTY OF SAN BERNARDO. ACTION WILL BE TAKEN AGAINST ANY INFRINGEMENT

© SAN BERNARDO

San Bernardo	SEASON: AW 25	SUPPLIER: TBC	QUALITY: 100% MERINO WOOL N/M TBC	STYLE: CHERRY CODED SWEATER
	CLIENT: SAN BERNARDO	DATE: 30/05/25	FAIRISLE JACQUARD GAUGE: 7GG	INTARSIA ARTWORK SLEEVE

INTARSIA ARTWORK RIGHT SLEEVE

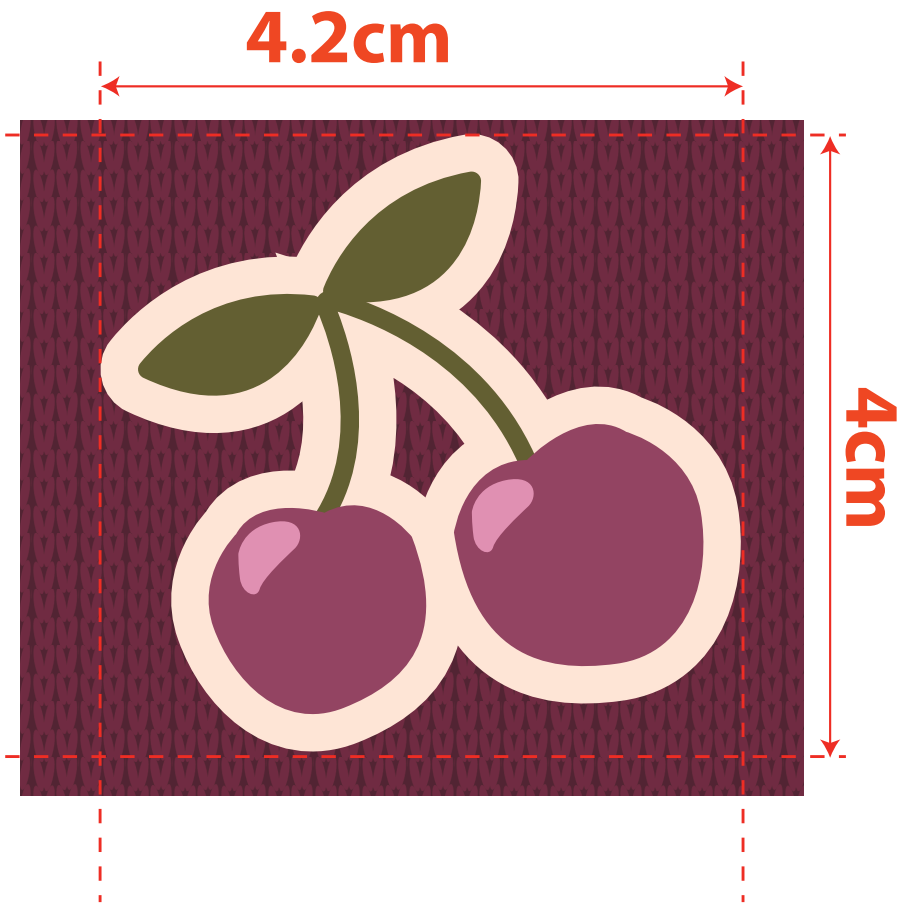

PLACEMENT

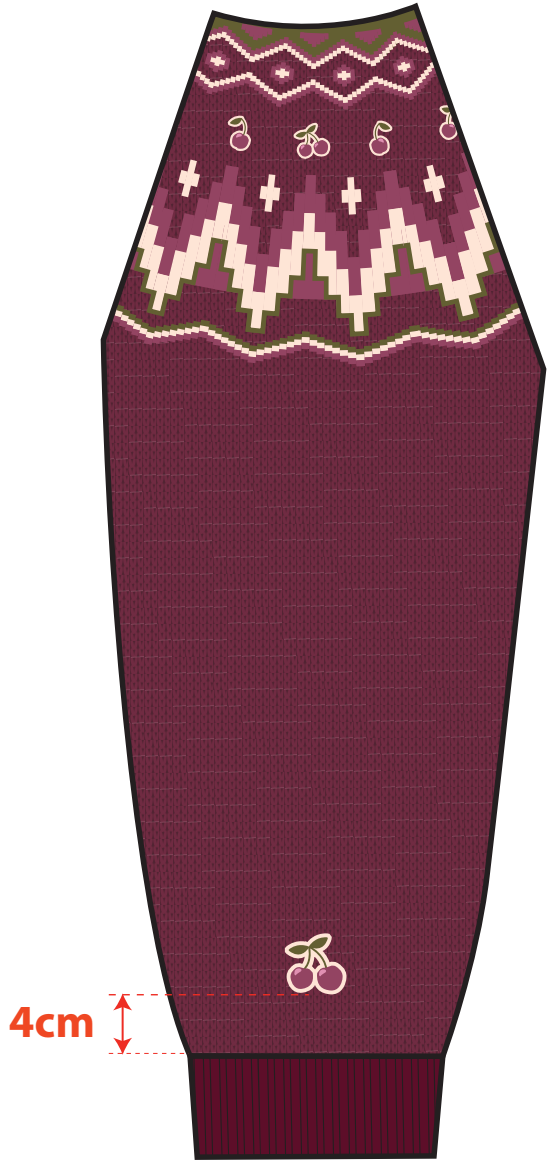

ANY IMAGES, DESIGN & SKETCHES CONTAINED HERE OR ATTACHED TO THIS DOCUMENT ARE COPYRIGHT AND INTELLECTUAL PROPERTY OF SAN BERNARDO. ACTION WILL BE TAKEN AGAINST ANY INFRINGEMENT

© SAN BERNARDO

San Bernardo	SEASON: AW 25	SUPPLIER: TBC	QUALITY: 100% MERINO WOOL N/M TBC	STYLE: CHERRY CODED SWEATER
	CLIENT: SAN BERNARDO	DATE: 30/05/25	FAIRISLE JACQUARD GAUGE: 7GG	PHOTO REFERENCES

INSPIRATION FOR SHAPE

REFERENCE FOR FAIRISLE PLACEMENT

ANY IMAGES, DESIGN & SKETCHES CONTAINED HERE OR ATTACHED TO THIS DOCUMENT ARE COPYRIGHT AND INTELLECTUAL PROPERTY OF SAN BERNARDO. ACTION WILL BE TAKEN AGAINST ANY INFRINGEMENT

© SAN BERNARDO

San Bernardo	SEASON: AW 25	SUPPLIER: TBC	QUALITY: 100% MERINO WOOL N/M TBC	STYLE: CHERRY CODED SWEATER
	CLIENT: SAN BERNARDO	DATE: 30/05/25	FAIRISLE JACQUARD GAUGE: 7GG	JACQUARD ARTWORK

COLOUR CODES:

GROUND:

#5c0f29

JACQUARD:

#934362

#625e32

#ffe5d6

ANY IMAGES, DESIGN & SKETCHES CONTAINED HERE OR ATTACHED TO THIS DOCUMENT ARE COPYRIGHT AND INTELLECTUAL PROPERTY OF SAN BERNARDO. ACTION WILL BE TAKEN AGAINST ANY INFRINGEMENT

© SAN BERNARDO

San Bernardo	SEASON: AW 25	SUPPLIER: TBC	QUALITY: 100% MERINO WOOL N/M TBC FAIRISLE JACQUARD GAUGE: 7GG	STYLE: CHERRY CODED SWEATER
	CLIENT: SAN BERNARDO	DATE: 30/05/25		POINTS OF MEASURE

(NECK UNFOLDED)

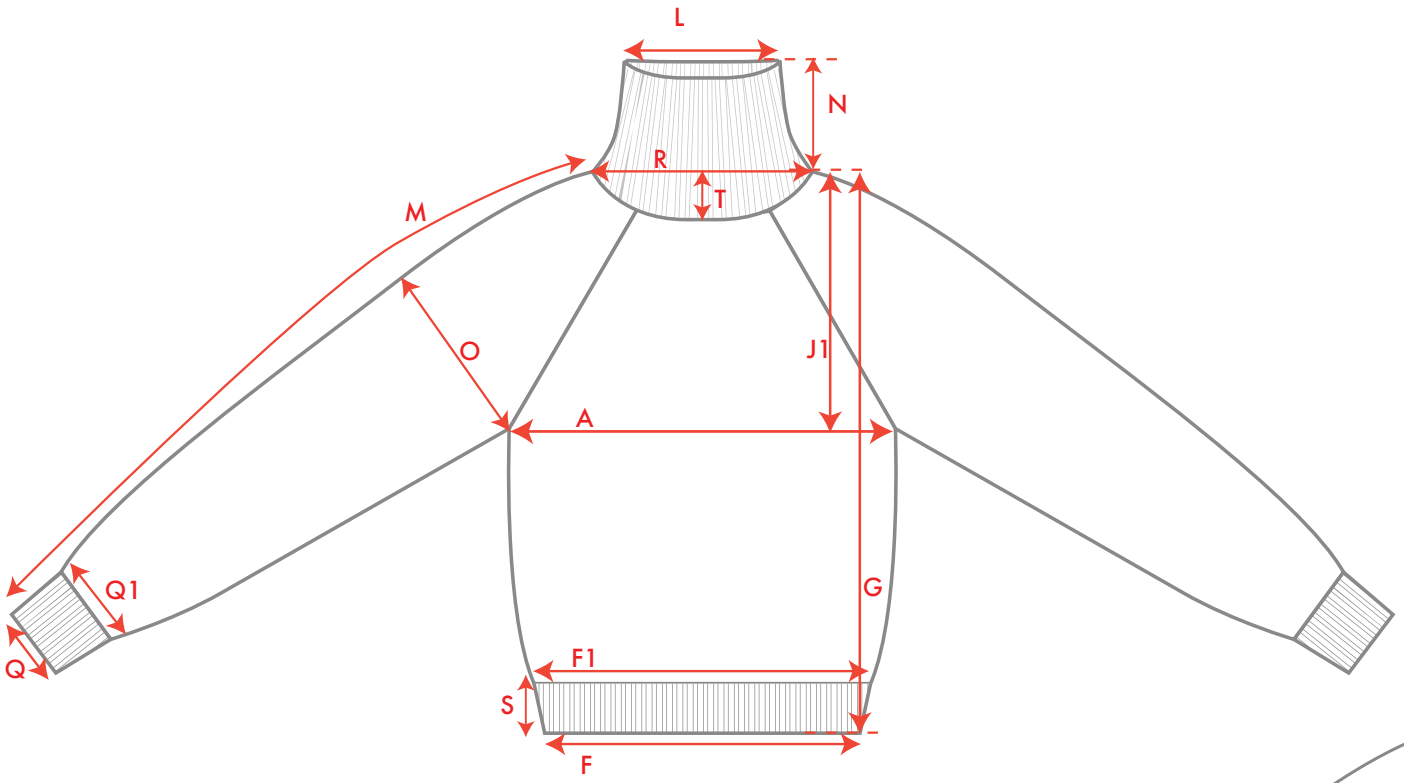

(NECK UNFOLDED)

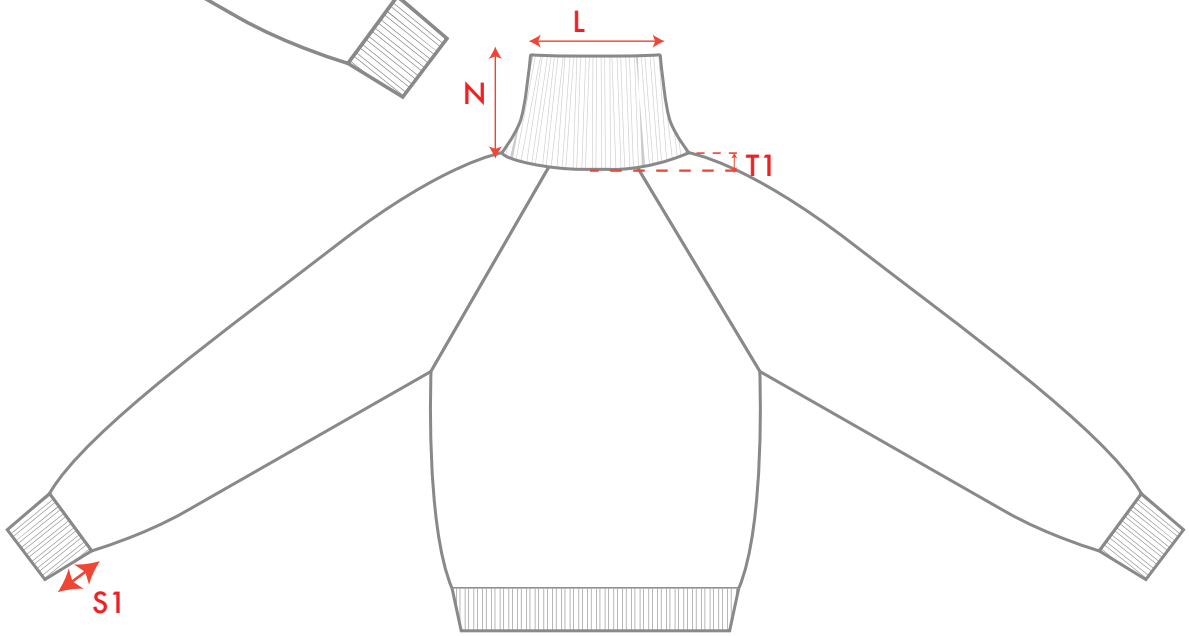

ANY IMAGES, DESIGN & SKETCHES CONTAINED HERE OR ATTACHED TO THIS DOCUMENT ARE COPYRIGHT AND INTELLECTUAL PROPERTY OF SAN BERNARDO. ACTION WILL BE TAKEN AGAINST ANY INFRINGEMENT

© SAN BERNARDO

San Bernardo	SEASON: AW 25	SUPPLIER: TBC	QUALITY: 100% MERINO WOOL N/M TBC	STYLE: CHERRY CODED SWEATER
	CLIENT: SAN BERNARDO	DATE: 30/05/25	FAIRISLE JACQUARD GAUGE: 7GG	SIZE CHART & POINTS OF MEASURE

ALL MEASUREMENTS ARE IN CM AND TAKEN WITH GARMENT LAID FLAT

SAMPLE SIZE S (36)

Measurement		XS (34)	S (36)	M (38)	L (40)	XL (42)	TOLERANCE +/-
Body width armhole to armhole	*A*	51.5	54	56.5	59	16.5	1
Hem width	*F*	39.5	42	44.5	47	49.5	1
Hem width before rib	*F1*	44.5	47	49.5	52	54.5	1
Total length SNP-hem	*G*	55	56	57	58	59	1
Armhole drop	*J1*	25.5	26	26.5	27	28	0.5
Sleeve length	*M*	69	70	71	72	73	0.5
Sleeve width	*O*	17.5	18	18.5	19	19.5	0.5
Cuff opening width	*Q*	8.5	9	9.5	10	10.5	0.5
Sleeve opening before cuff	*Q1*	12	12.5	13	13.5	14	0.5
Neckline width	*R*	16.5	17	17.5	18	18.5	0.5
Front neck drop	*T*	5	5.5	6	6.5	7	0.5
Back neck drop	*T1*	2	2	2	2	2	0.5
Collar rib depth, unfolded	*N*	13	13	13	13	13	0.5
Collar opening	*L*	15.5	16	16.5	17	17.5	0.5
Hem depth	*S*	6	6	6	6	6	0.5
Cuff depth	*S1*	6	6	6	6	6	0.5

SEE PREVIOUS PAGE FOR POINTS OF MEASURE

ANY IMAGES, DESIGN & SKETCHES CONTAINED HERE OR ATTACHED TO THIS DOCUMENT ARE COPYRIGHT AND INTELLECTUAL PROPERTY OF SAN BERNARDO. ACTION WILL BE TAKEN AGAINST ANY INFRINGEMENT

© SAN BERNARDO

BILL OF MATERIALS

GARMENT					
YARN	GAUGE	CONTENT	QUANTITY	N/M	PRICE
FRONT, BACK, SLEEVES	7GG JACQUARD,	100% MERINO WOOL	TBC	TBC	TBC
NECK RIB, HEM RIB, CUFF RIB	7GG, 1X1 RIB	100% MERINO WOOL	TBC	TBC	TBC
LINKING	7GG	100% MERINO WOOL	TBC	TBC	TBC
TRIMS & NOTIONS					
ITEM	PLACEMENT	CONTENT	QUANTITY	PRICE	
EMBROIDERY THREAD	AT UPPER BACK BELOW CB NECK	AS RECOMMENED	TBC	TBC	
LABELS & HANGTAGS					
ITEM	PLACEMENT	CONTENT	QUANTITY	PRICE	
BACK NECK LABEL	CB NECKLINE AT NECK RIB SEAM	TBC	1	TBC	
SIZE LABEL	ATTACH TO BACK NECK LABEL	TBC	1	TBC	
CARE LABEL	LEFT SIDE SEAM, 11CM FROM HEM	100% PI, PRINTED	1	TBC	
HANGTAG WITH STRING	ATTACH TO BACK NECK LABEL	TBC	1	TBC	
PACKAGING					
ITEM	QUANTITY	PRICE			
BAG	1	TBC			

ANY IMAGES, DESIGN & SKETCHES CONTAINED HERE OR ATTACHED TO THIS DOCUMENT ARE COPYRIGHT AND INTELLECTUAL PROPERTY OF SAN BERNARDO. ACTION WILL BE TAKEN AGAINST ANY INFRINGEMENT

© SAN BERNARDO